Experiment–8: Comparison of Transistor Amplifier

Group no: - 14	Date of Experiment: - 19/10/2023
Roll no: - 22CS02002 20CS02012	Name: - Soham Chakraborty - Kasthuri Hrushikesh

Pre-Lab Work: LTSpice simulation of first 3 parts.

Part-1

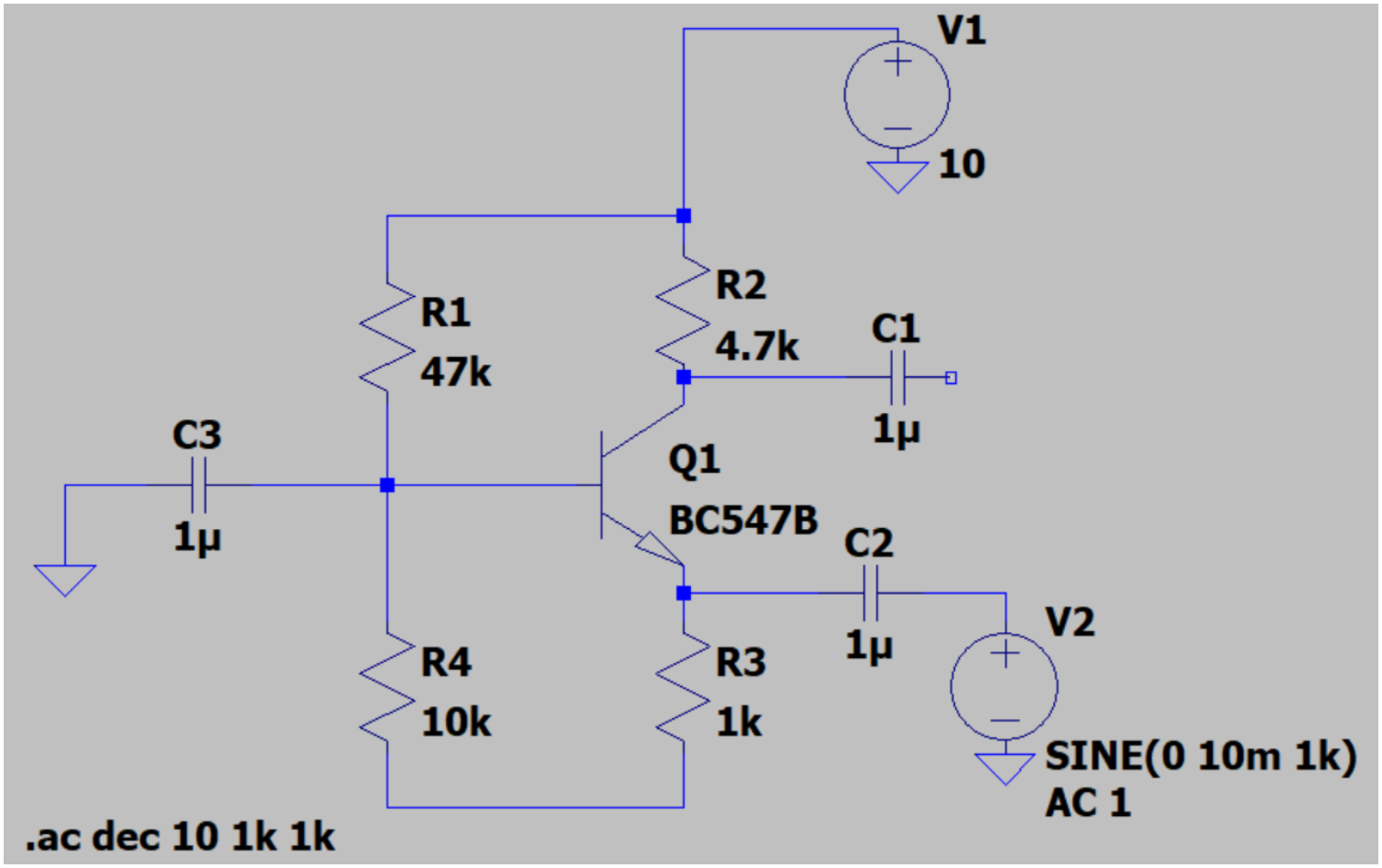

Simulated Gain = 29.03 dB

Part- 2

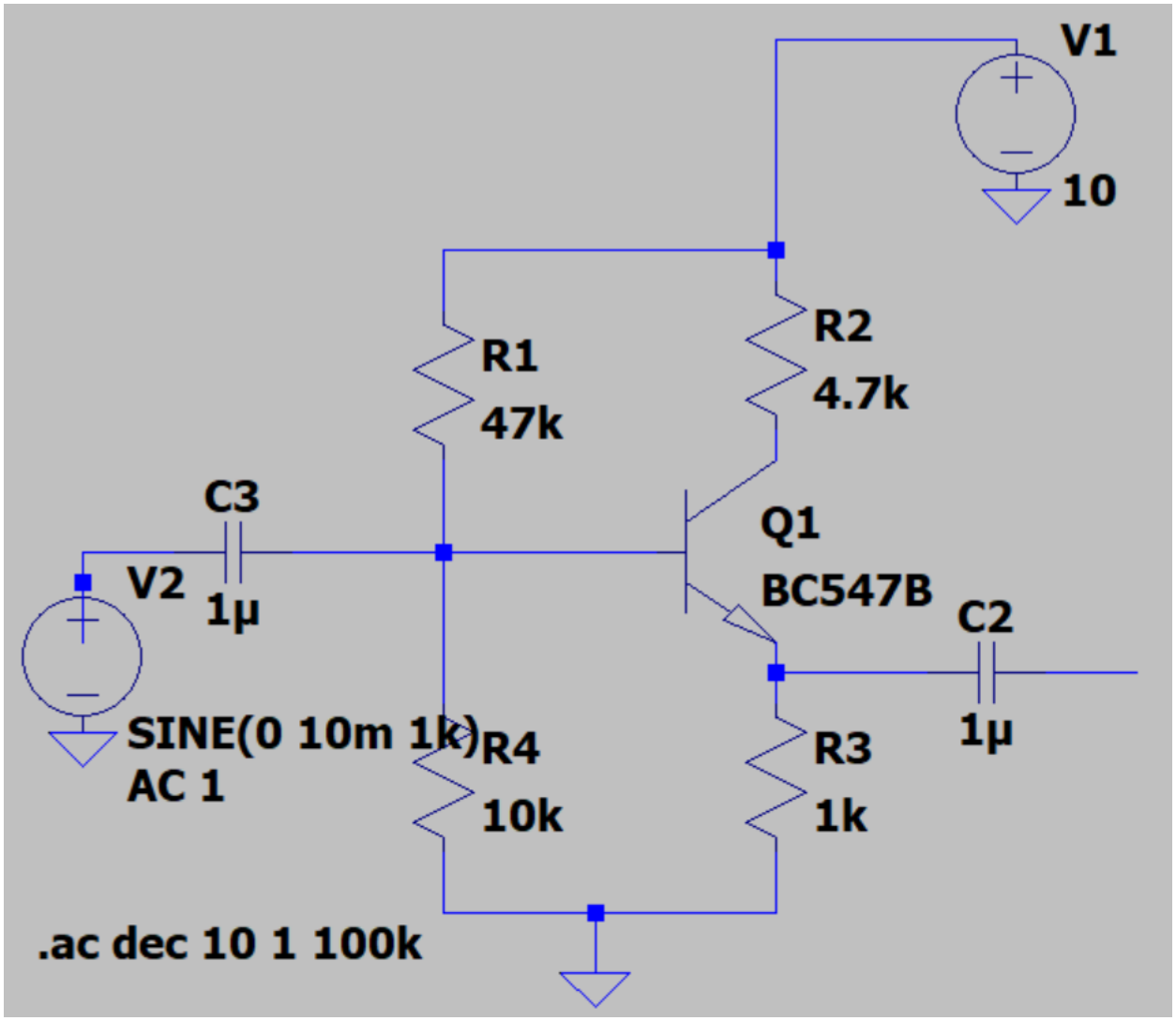

Simulated Gain = -0.233 dB

Part-3

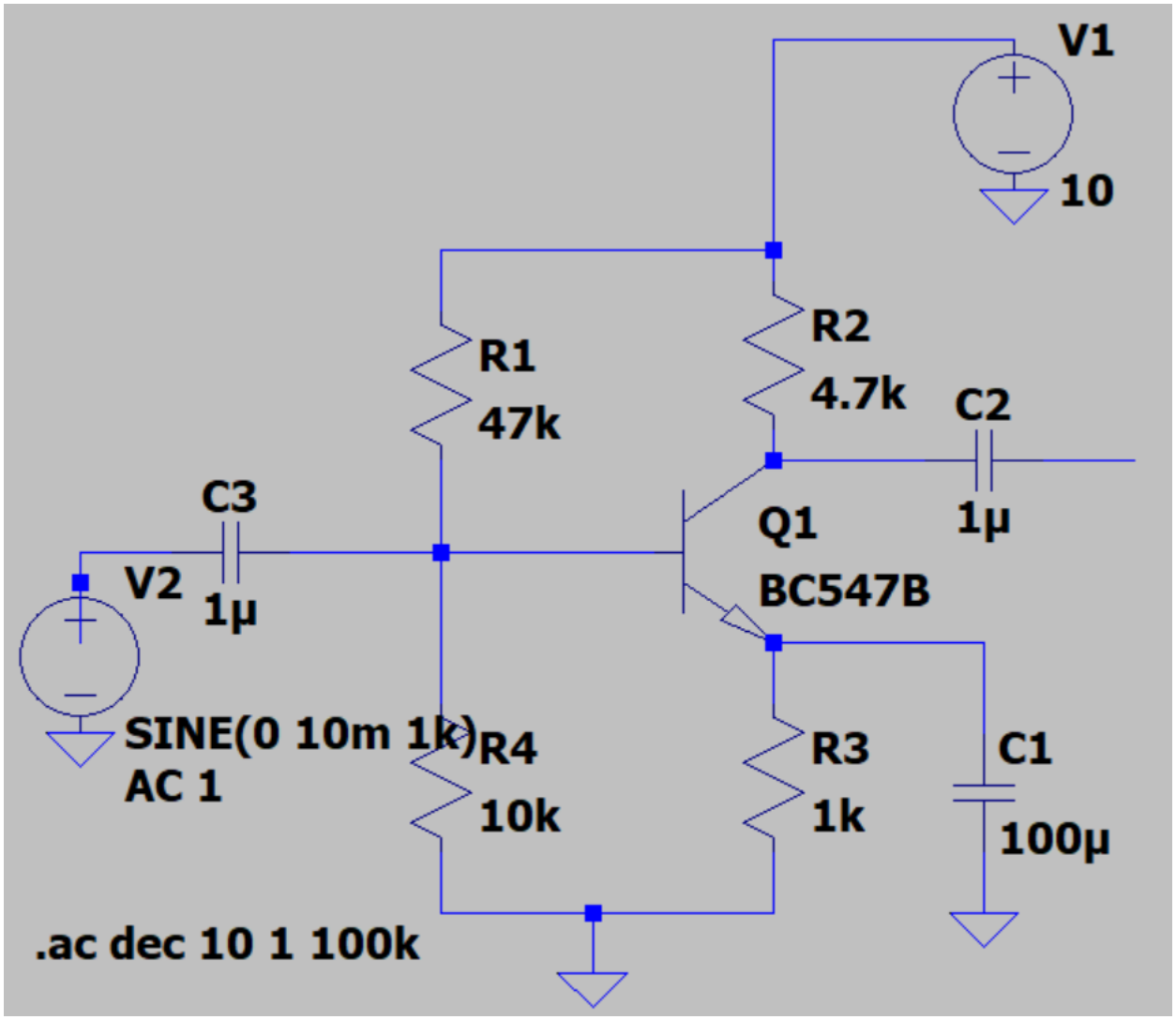

Simulated Gain (without by-pass) = 13.17 dB

Simulated Gain (using by-pass) = 44.86 dB

Part- 1: Common Base Amplifier

Aim of the Experiment: - Set up a circuit to observe and measure the Gain of a Common-Base amplifier.

Equipment required: -

- Required resistor values- 4.7 kΩ, 47 kΩ, 10 kΩ, 1.0 kΩ
- Breadboard (×1)
- Constant DC power supply 10V
- Function Generator
- DSO(Digital Storage Oscilloscope)
- BC547 transistor.
- Capacitor- **1uF (×3).**
- Digital Multimeter to measure Voltage&Resistance.
- Connecting wires

Circuit Diagram: -

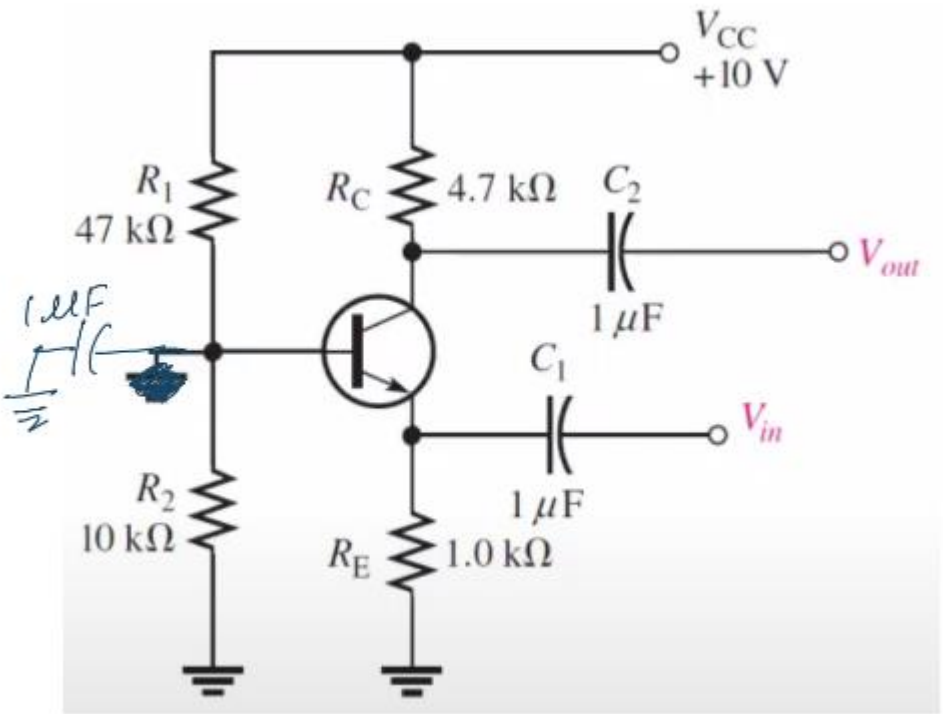

Theoritical Calculations:-

$\beta = 273$ (Given)

$R_{th} = \frac{R1R2}{R1+R2} = 8.24\ k\Omega$ $\quad V_{th} = \frac{VccR2}{R1+R2} = 1.754$ $\quad I_B = \frac{Vth}{Rth+(1+\beta)Re} = 3.734\ \mu A$

$I_c = \beta I_b = 1.019$ ma

$r_\pi = \frac{VT}{Ib} = \frac{26mV}{3.73\mu A} = 6.963\ k\Omega$

$A_V = \frac{\beta Rc}{r\pi} = 273x4.7/6.963 = 184.27$

Gain (in dB) = $20\log(A_V) = 45.309$

Observations:-

$V_{in} = 200$ mV

$V_{out} = 5.5$ V

Gain = 27.5

Gain (in dB) = 28.7866

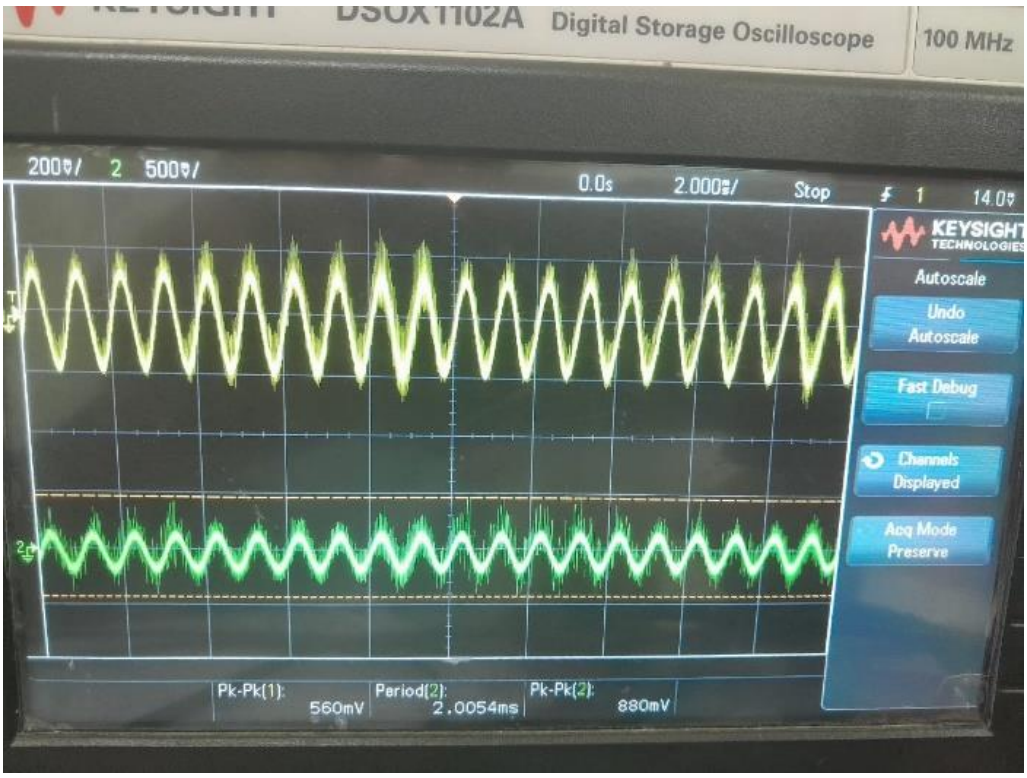

Part 2: Common Collector Amplifier

Aim of the Experiment: - Designing of a Common Collector Amplifier according to the given specifications.

Equipment required: -

- Required resistor values- 4.7 kΩ, 47 kΩ, 10 kΩ, 1.0 kΩ
- Breadboard (×1)
- Constant DC power supply 10V
- Function Generator
- DSO(Digital Storage Oscilloscope)
- BC547 transistor.
- Capacitor- **1uF (×2).**
- Digital Multimeter to measure Voltage/Resistance.
- Connecting wires

Circuit Diagram: -

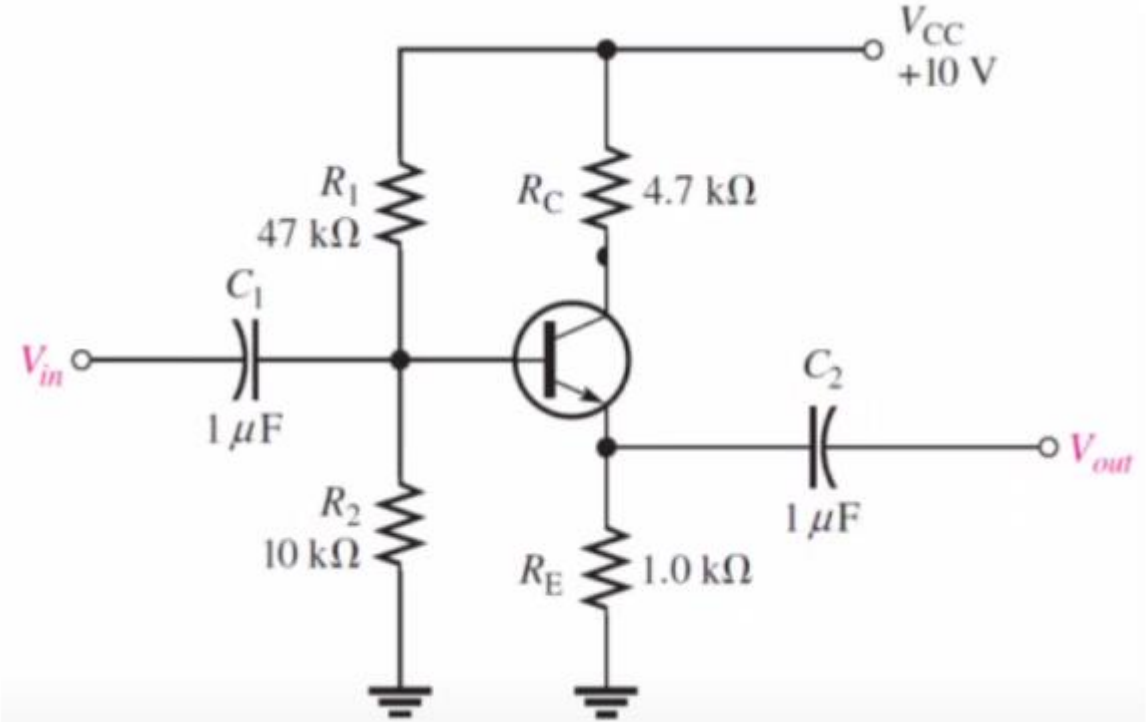

<u>Theoritical Calculations:-</u>

$\beta = 273$ (Given)

$R_{th} = \frac{R1R2}{R1+R2} = 8.24\ k\Omega$ $\quad V_{th} = \frac{VccR2}{R1+R2} = 1.754$ $\quad I_B = \frac{Vth}{Rth+(1+\beta)Re} = 3.734\ \mu A$

$I_c = \beta I_b = 1.019$ ma

$r_\pi = \frac{VT}{Ib} = \frac{26mV}{3.73\mu A} = 6.963\ k\Omega$ $\quad V_{out} = (I_b + I_c)\ R_E = (1+\beta)R_E$

$A_V = \frac{(1+\beta)Re}{r\pi+(1+\beta)Re} = 0.97$

Observations:-

$V_{in} = 560$ mV

$V_{out} = 880$ mV

Gain = 1.714

Gain (in dB) = 3.92

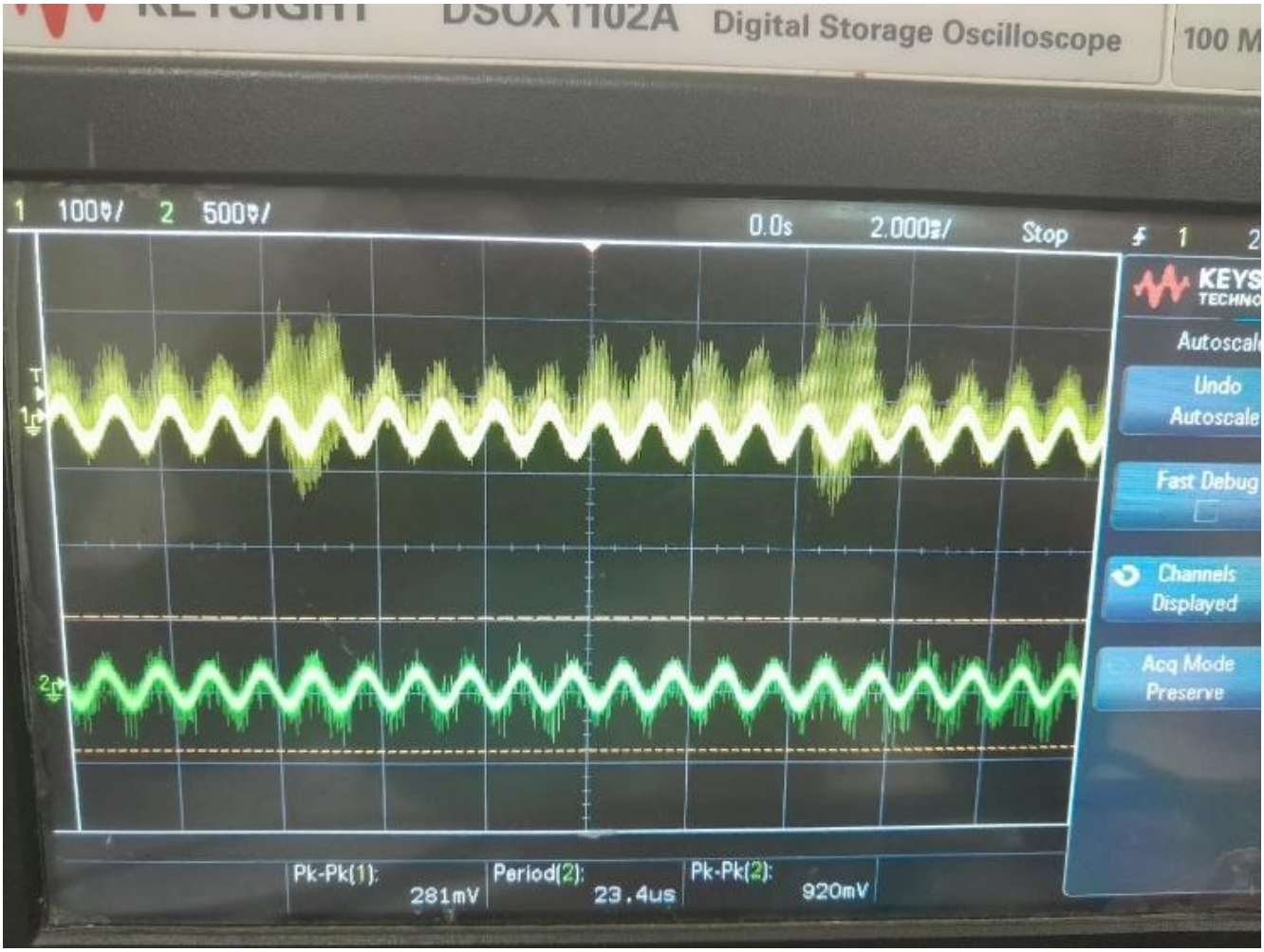

Part- 3: Common Emitter Amplifier

Aim of the Experiment: - Set up a circuit to observe and measure the Gain of a Common-
Emitter amplifier.

Equipment required: -

- Required resistor values- 4.7 kΩ, 47 kΩ, 10 kΩ, 1.0 kΩ
- Breadboard (×1)
- Constant DC power supply 10V
- Function Generator
- DSO(Digital Storage Oscilloscope)
- BC547 transistor.
- Capacitor- **1uF (×3), 100uF.**
- Digital Multimeter to measure Voltage/Resistance.
- Connecting wires

Circuit Diagram: -

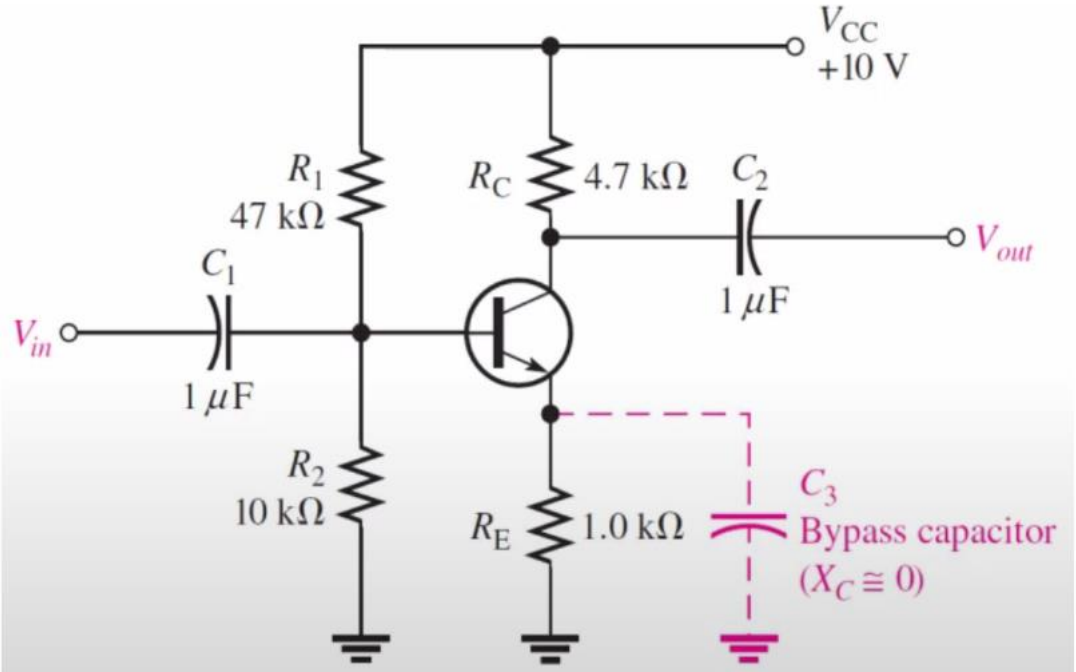

Observations:-

Without by-pass capacitor:

V_{in} = 281 mV

V_{out} = 920 mV

Gain = 3.27

Gain (in dB) = 10.29

With 100uF by-pass:

V_{in} = 20 mV

V_{out} = 3.67 V

Gain = 183.5

Gain (in dB) = 45.27

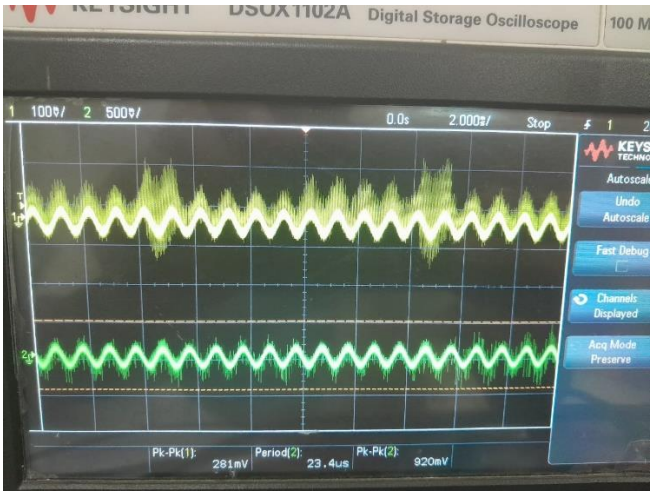

Without by-pass capacitor

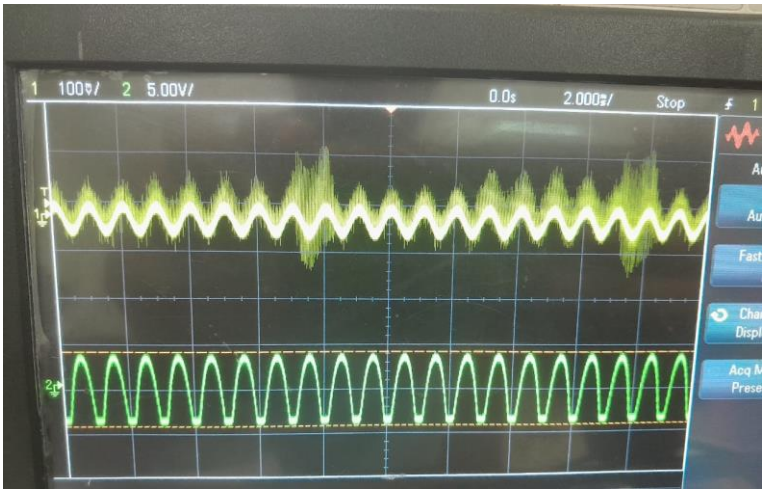

With by-pass capacitor

Theoritical Calculations:-

a. Without by-pass capacitor-

We know gain of a CE Amplifier

$A_v = \frac{-\beta.Rc}{r\pi+(1+\beta)Re}$ [β = 273]

From DC Analysis,

$I_B = \frac{Vth-Vbe}{Rth+(1+\beta)Re}$ = 3.73 µA [$R_{TH} = R_{B1} \parallel R_{B2}$, $V_{TH} = V_{DD} \times \frac{Rb2}{Rb1+Rb2}$ = 1.75 V

$r_\pi = \frac{VT}{Ib} = \frac{26mV}{3.73\mu A}$ = 6.96 kΩ

A_V = 4.57

Gain (in dB) = 20log(A_V) = 13.20

b. With by-pass capacitor-

Here effective R_E = 0 [Since X_C = 0]

Hence we have the formula for gain as,

$A_v = \frac{-\beta.Rc}{r\pi}$ [β = 273]

From DC Analysis,

$I_B = \frac{Vth-Vbe}{Rth+(1+\beta)Re}$ = 3.73 µA [$R_{TH} = R_{B1} \parallel R_{B2}$, $V_{TH} = V_{DD} \times \frac{Rb2}{Rb1+Rb2}$ = 1.75 V

$r_\pi = \frac{VT}{Ib} = \frac{26mV}{3.73\mu A}$ = 6.96 kΩ

A_V = 184.27

Gain (in dB) = 20log(A_V) = 45.31

Part-4: Design of a CE Amplifier

Aim of the Experiment: - Designing of a Common-Emitter Amplifier according to the given specifications.

Equipment required: -

- Required resistor values- 4.7 kΩ, 47 kΩ, 10 kΩ, 1.0 kΩ
- Breadboard (×1)
- Constant DC power supply 10V
- Function Generator
- DSO(Digital Storage Oscilloscope)
- BC547 transistor.
- Capacitor- **1uF (×3), 100uF.**
- Digital Multimeter to measure Voltage/Resistance.
- Connecting wires

Circuit Diagram: -

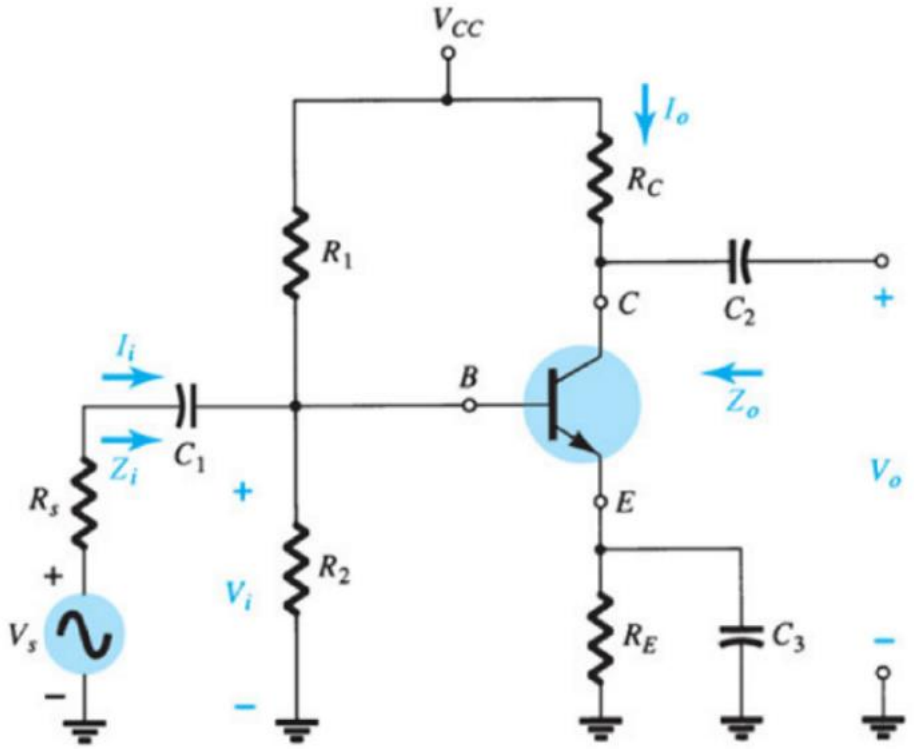

V_{CC} =12V

A_V = 50

I_C = 2mA

β = 27

Theoritical Calculations:-

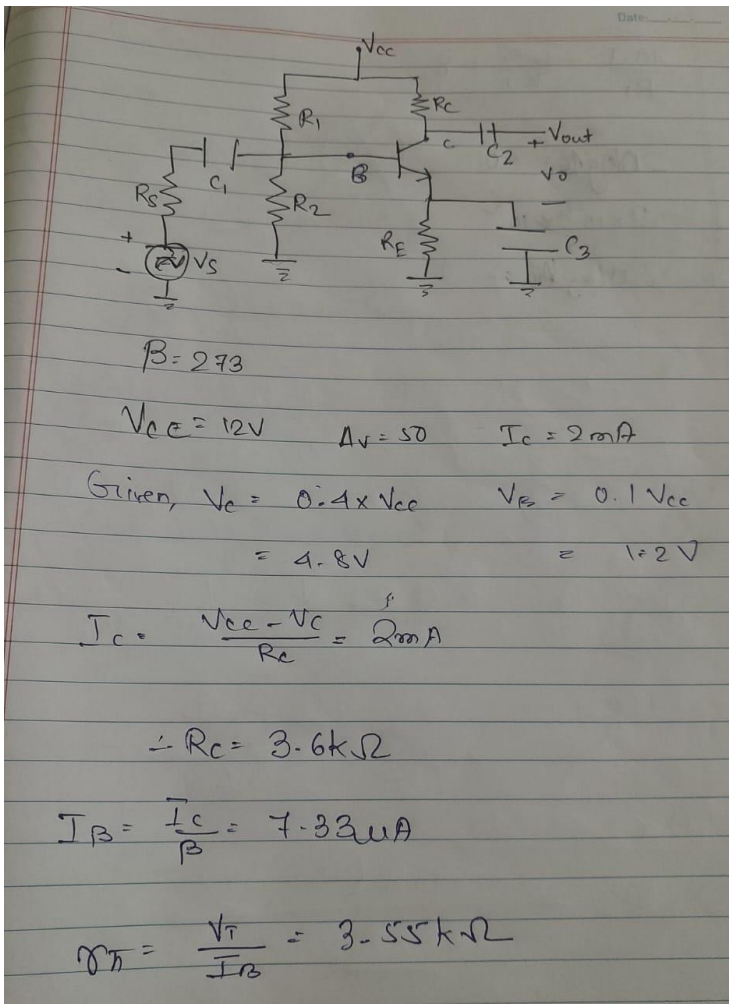

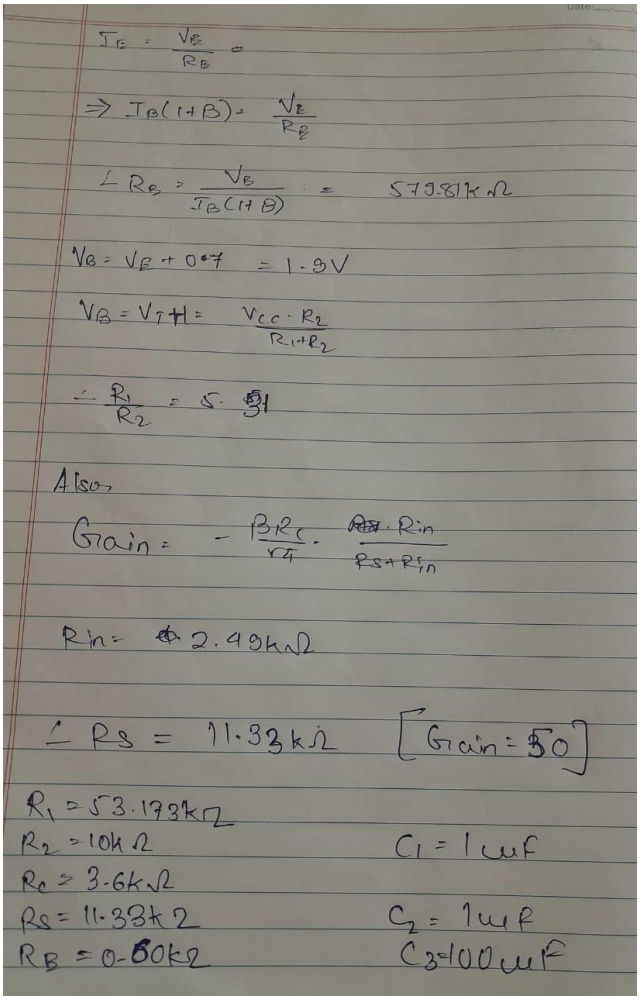

Theoritically calculated values:-

R_1 = 53.173 kΩ

R_2 = 10 kΩ

R_C = 3.6 kΩ

R_S = 11.33 kΩ

R_E = 0.6 kΩ

C_1 = 1μF

C_2 = 1μF

C_3 = 100μF

LTSpice Simulation:-

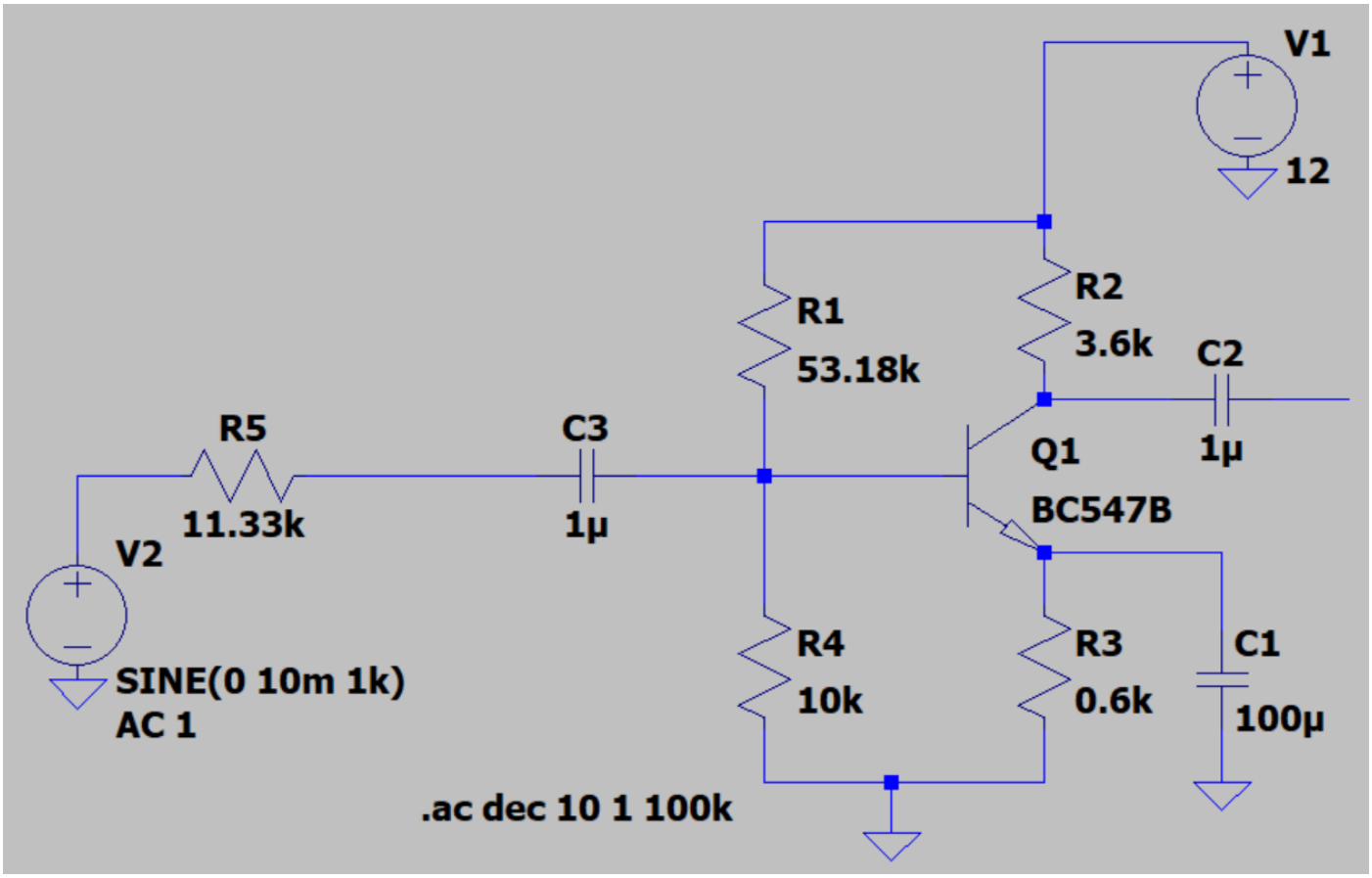

Simulated Gain A_V = 45.4

Conclusion:-

- The voltage Gain in the Common-Emitter Amplifier (with by-pass) was found to be highest, followed by Common-Base Amplifier, and Common-Collector Amplifier having lowest having Gain = 1.
- Theoretical, Experimental and Simulated are all observed to be matching very closely with each other.
- It was observed that the LTSpice simulation and the experimentally calculated values, match in their basic characteristics but have some differences in the numerical values, this might be due to various errors. But in this case, this is most likely due to errors in receiving signal by the DSO, which might have caused errors in values due to lack of precision at low frequency and amplitude.
- In Part-4 the Simulated Gain = 45.4 matched very closely with our required Gain = 50, using the designed circuit.

Discussion:-

- **Compare the Voltage Gain without the by-pass capacitor and with the by-pass capacitor in Part-3?**

The Gain using the by-pass capacitor was observed to be higher. This was due to the fact that the by-pass capacitor has a very low impedance X_C. Due to this, the net resistance R_E (effective) was nearly 0. In the expression of gain in Common-Emitter Amplifier:-

$$\boxed{A_v = \frac{-\beta . Rc}{r\pi + (1+\beta) Re}}$$

Observe that gain inversely depends upon R_E. Hence, reducing (vanishing) R_E causes Gain A_V to increase.
This is reason for increase in gain on the introduction of the by-pass capacitor.

- **Compare the Voltage Gain for each configuration after finishing Part-1, Part-2 and Part-3.**

Common-Emitter Amplifier:

- Voltage Gain (Av_CE): The common-emitter configuration offers high voltage gain. The voltage gain is typically moderate to high, depending on the values of the biasing resistors and the transistor's characteristics. It is typically greater than 1 (positive) and can be significantly larger. Av_CE is given by: $Av_CE = -\beta * (RC / RE)$
- The negative sign indicates that the output is inverted with respect to the input.

Common-Base Amplifier:

- Voltage Gain (Av_CB): The common-base configuration provides a voltage gain of approximately 1, or slightly less than 1. The voltage gain is typically close to unity and is less than the common-emitter configuration. Av_CB is given by: $Av_CB \approx 1 / \beta$
- This means that the output voltage is approximately in phase with the input voltage.

Common-Collector Amplifier (Emitter Follower):

- Voltage Gain (Av_CC): The common-collector configuration, often referred to as the emitter follower, provides a voltage gain of approximately 1. The voltage gain is very close to unity and is slightly less than 1 due to voltage division between the emitter and collector resistors. Av_CC is given by: $Av_CC \approx 1$
- The output voltage follows the input voltage closely in phase and is slightly lower in magnitude due to the voltage divider effect.

In summary, the common-emitter amplifier offers the highest voltage among these three configurations, with a typical negative sign, indicating phase inversion. The common-collector (emitter follow) amplifier provides a voltage gain of approximately 1, maintaining the same phase as the input signal but slightly reduced in magnitude. The choice of configuration depends on the specific requirements of the circuit and the desired voltage gain and phase relationship.